01_DRV_REF_36V_220W_SLFOC.SchDoc

OP-AMP FILTERS

CSOC — R35 470R — Amp_iW_P2_9_XMC
C23 330pF

CSOB — R38 470R — Amp_iV_P2_10_XMC
C25 330pF

CSOA — R40 470R — Amp_iU_P2_11_XMC
C27 330pF

HALL SENSOR

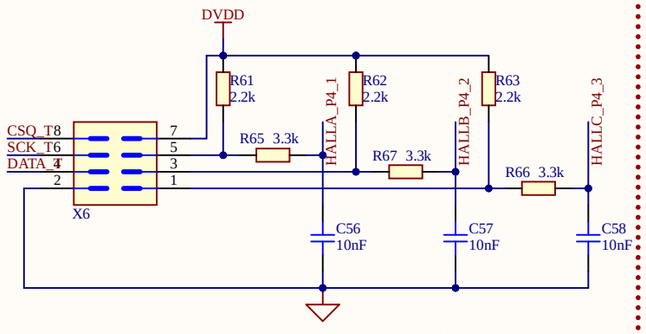

CAN BUS

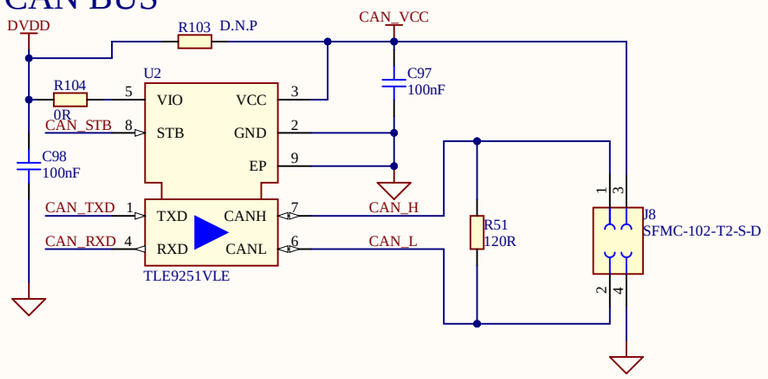

Note:

All resistors are 0603 1% unless otherwise specified

All capacitors are 0603 10% unless otherwise specified

DEBUG CONNECTOR(8Pin) PC-XMC

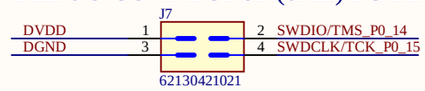

Restricted

Infineon Technologies

Title	REF_36V_220W_SLFOC		
Variant	[No Variations]	Approved	<Appr.>
Size: A3	Document Name: 01_DRV_REF_36V_220W_SLFOC.SchDoc	Rel. V1.01	Rev. V1.01
Author: Kent			
Date: 4/12/2024	Time: 3:00:38 PM	SVN Revision: Not in version control	
		Sheet 3	of 4

02_INVERTER_REF_36V_220W_SLFOC.SchDoc

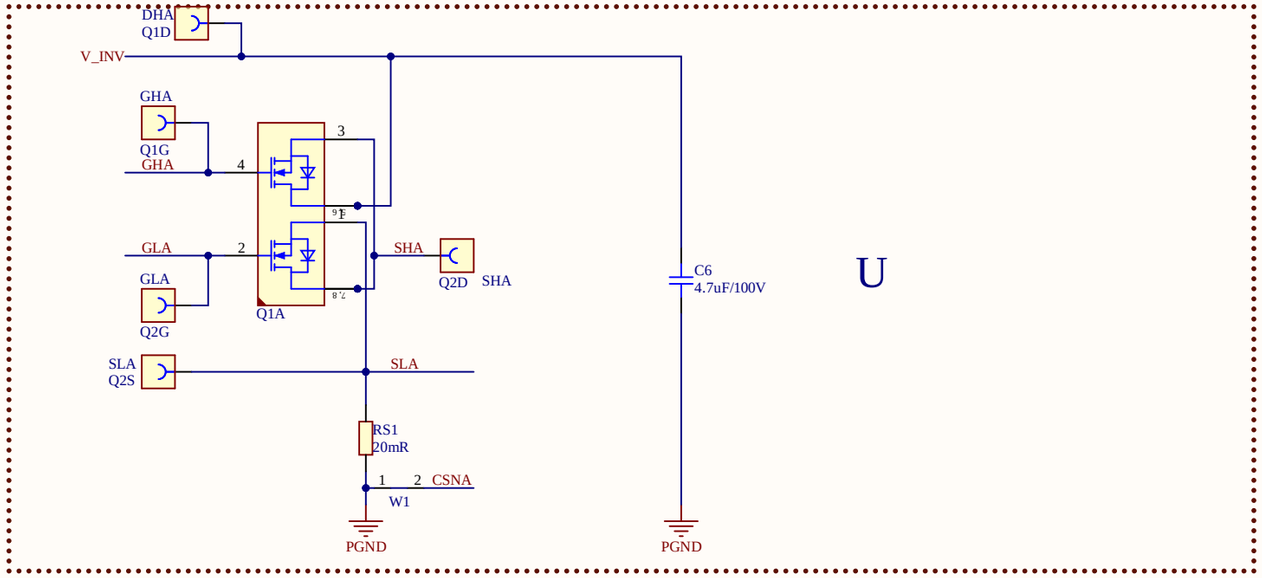

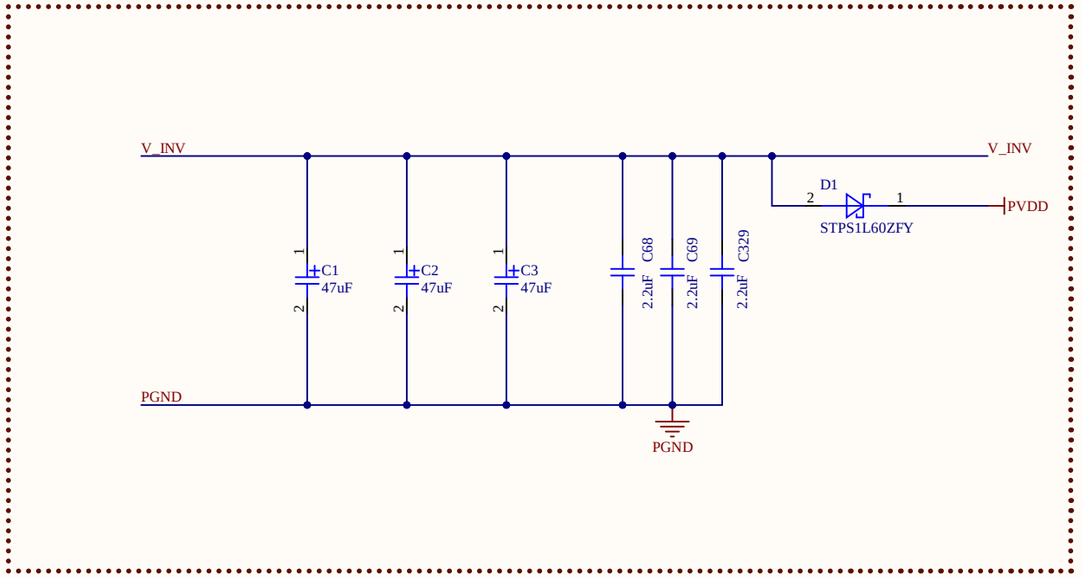

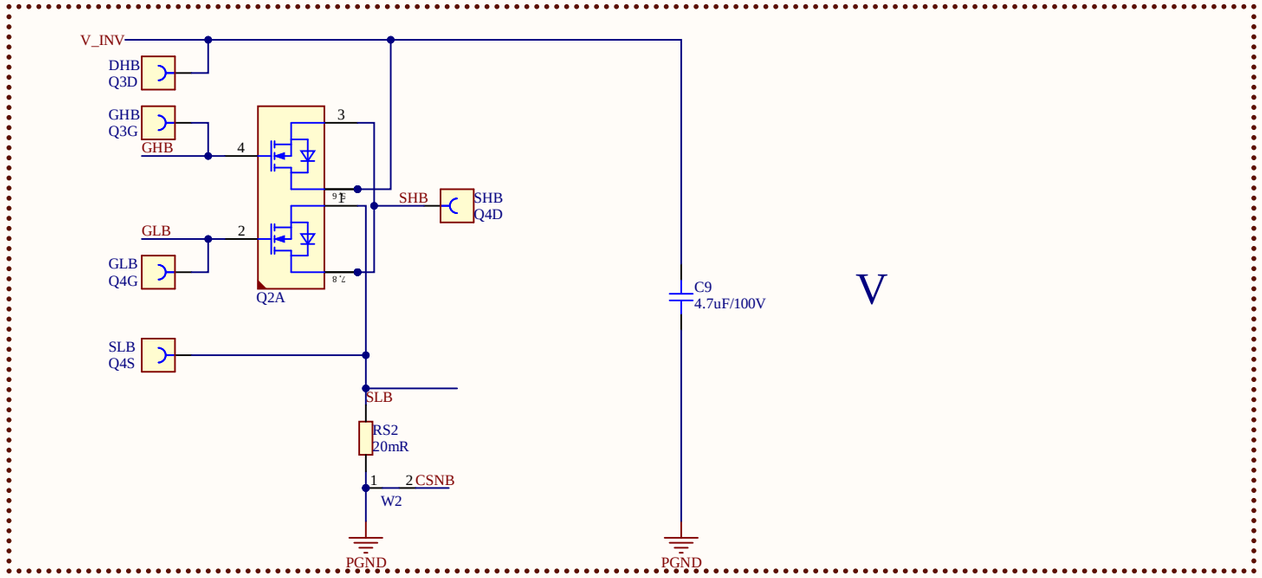

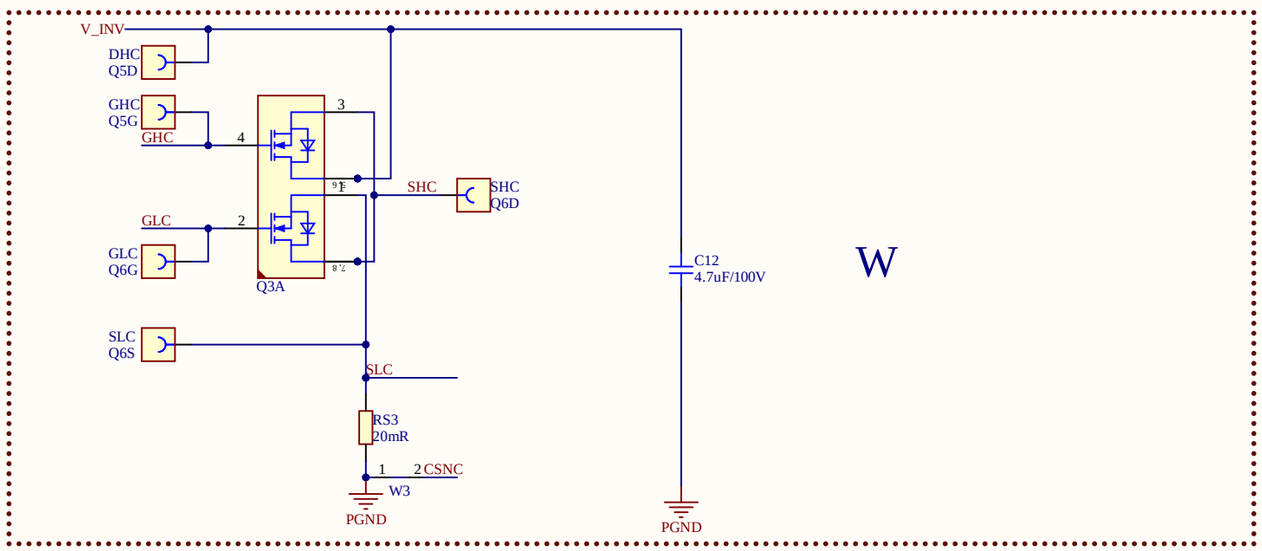

PCB fiducials

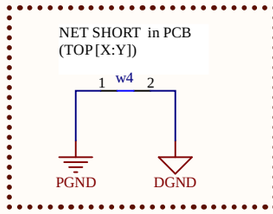

Restricted

Infineon Technologies

Title	REF_36V_220W_SLFOC		
Variant	[No Variations]	Approved	<Appr.>
Size: A3	Document Name: 02_INVERTER_REF_36V_220W_SLFOC.SchDoc	Rel. V1.01	Rev. V1.01
Author: Kent			
Date: 4/12/2024 Time: 3:00:38 PM	SVN Revision: Not in version control		
	Sheet 4 of 4		